CYRUS
LINEAR MOTION SYSTEM

Centered Square Flange Linear Bearing Long Type-LMKC-L

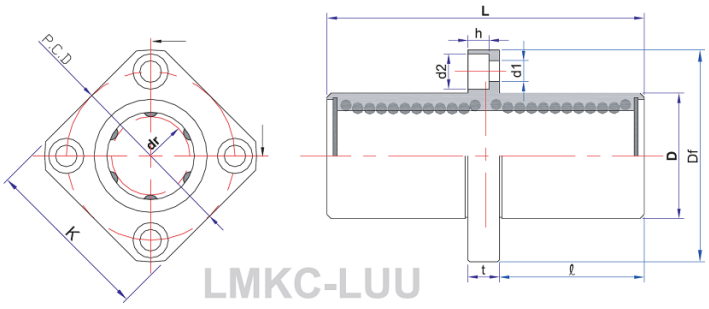

Main Dimensions																	Squar-eness	Eccentincity (max.)	Basic load rating	
Model No.	Number of ball rows	Weight	Inscribed circle diameter		Outer diameter		Length		l	Flange				Hole for attachment					Dynamic	Static
		g	dr	Tolerance	D	Tolerance	L	Tolerance		Df	K	t	P.C.D	d1	d2	h			C(kgf)	C_0(kgf)
LMKC 6L	4	25	6	0 -0.010	12	0 -0.013	35	0 -0.30	15	28	22	5	20	3.5	6	3.1	0.015	0.015	33	54
LMKC 8L		43	8		15		45		20	32	25		24						44	80
LMKC10L		78	10		19	0 -0.016	55		24.5	40	30	6	29	4.5	7.5	4.1			60	112
LMKC12L		90	12		21		57		25.5	42	32		32						83	160
LMKC13L		108	13		23		61		27.5	43	34		33						83	160
LMKC16L	5	165	16		28		70		32	48	37		38						126	240
LMKC20L		225	20	0 -0.012	32	0 -0.019	80		36	54	42	8	43	5.5	9	5.1	0.020	0.020	143	280
LMKC25L	6	500	25		40		112	0 -0.40	52	62	50		51						159	320
LMKC30L		590	30		45		123		56.5	74	58	10	60	6.6	11	6.1			254	560
LMKC35L		930	35	0 -0.015	52	0 -0.022	135		62.5	82	64		67				0.025	0.025	270	640
LMKC40L		1380	40		60		151		69	96	75	13	78	9	14	8.1			350	820
LMKC50L		3400	50		80		192		89.5	116	92		98						620	1622
LMKC60L		4060	60	0 -0.020	90	0 -0.025	209		95.5	134	106	18	112	11	17.5	10.8	0.025	0.025	770	2040