埋入型自潤軸承-SPB

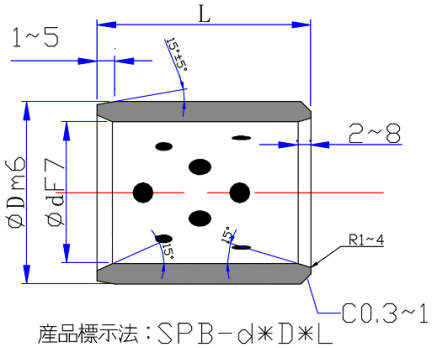

產品標示法：SPB-d*D*L
(SPB-內徑*外徑*長度)

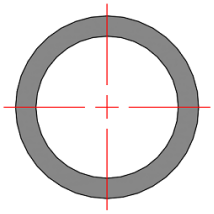

軸心使用建議
一般高荷重用:d8
一般輕荷重用:c7
高精度使用:f7

Ød		ØD		$L^{-0.10}_{-0.30}$																			
				8	10	12	15	16	20	25	30	35	40	45	50	60	70	80	100	120	130	140	150
8	+0.028	12	+0.018	●	●	●	●																
10	+0.018	14	+0.007	●	●	●	●		●														
12	+0.034	18			●	●	●	●	●	●	●												
13	+0.016	19			●		●		●														
14	+0.028	20			●	●	●		●	●	●												
15	+0.018	21			●	●	●	●	●	●	●												
16	+0.034	22	+0.021		●	●		●	●	●	●	●	●										
18	+0.016	24	+0.008				●	●	●	●	●	●	●	●	●								
20		28					●	●	●	●	●	●	●										
20		30						●	●	●	●	●	●	●	●	●							
25	+0.041	33						●	●	●	●	●	●	●	●								
25	+0.020	35						●	●	●	●	●	●	●	●	●							
30		38							●	●	●	●	●	●	●	●							
30		40	+0.025						●	●	●		●										
31.5		40	+0.009						●	●	●	●	●	●	●	●							
35		44									●	●	●	●	●	●							
35		45									●	●	●	●	●	●							
40		50							●	●	●	●	●	●	●	●	●	●					
40		55							●	●	●	●	●	●	●	●							
45	+0.050	55									●	●	●	●	●	●							
45	+0.025	56									●	●	●	●	●	●							
45		60									●	●	●	●	●	●	●	●					
50		60									●	●	●	●	●	●	●	●					
50		62	+0.030								●	●	●	●	●	●	●						
50		65	+0.011								●		●	●	●	●	●	●	●				
55		70											●	●	●	●	●						
60		74									●	●	●	●	●	●	●	●					
60		75									●	●	●	●	●	●	●	●	●				
63		76														●	●	●					
65		80													●	●	●	●					
70	+0.060	85										●	●	●	●	●	●	●	●				
70	+0.030	90													●	●	●	●					
75		90														●	●	●	●				
75		95	+0.035													●	●	●	●				
80		96	+0.013										●	●	●	●	●	●	●	●			
80		100											●	●	●	●	●	●	●	●		●	
90		110														●		●	●	●			
100	+0.071	120														●	●	●	●	●		●	
110	+0.026	130																●	●	●			
120		140																●	●	●		●	
125		145																	●	●			
130		150	+0.040																●		●		
140	+0.083	160	+0.015																●			●	
150	+0.042	170																	●				●
160		180																	●				●